Composite Sorter Upgrade Training Manual

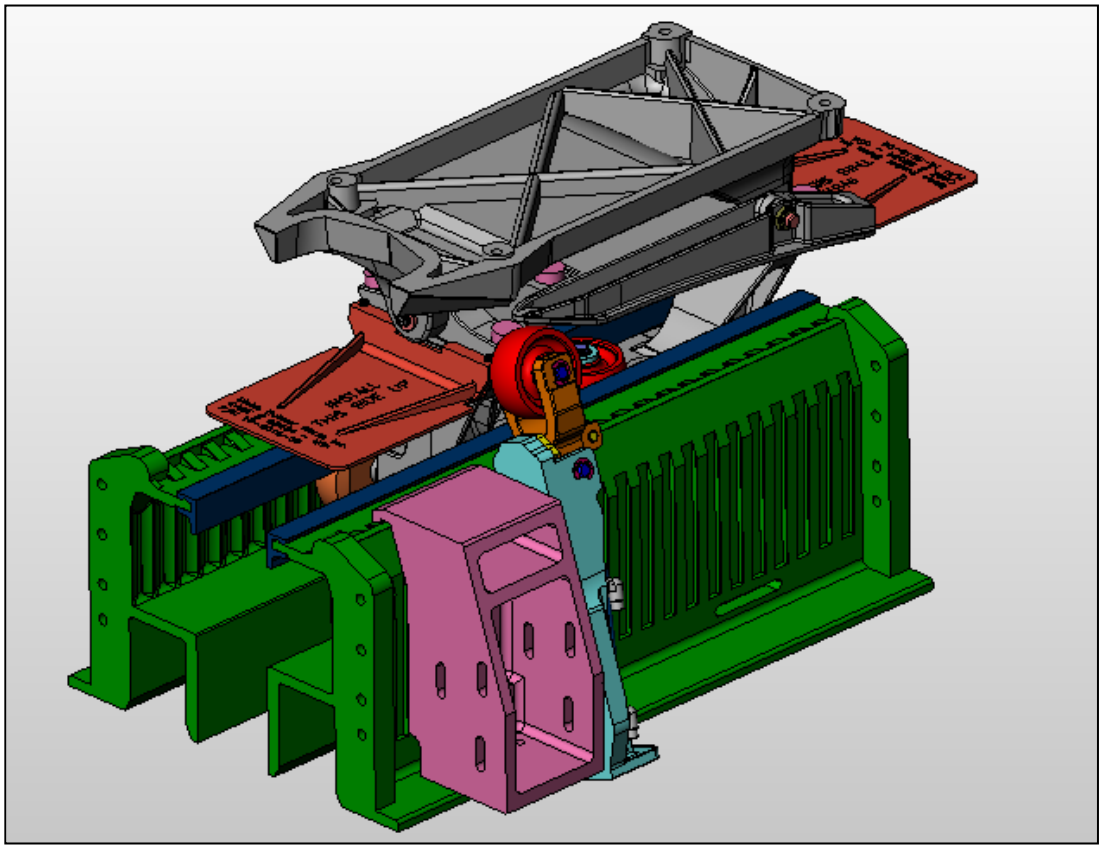

Globe Composite Solutions, Ltd.
254 Beech Street
Rockland, MA 02370-0183
781-871-3700
781-871-6631 (fax)
www.globecomposite.com

Revision Log

Rev 0 March 6, 2006	Original Release
Rev 1 June 26, 2006	Added Chain Link Replacement, Update Static Dissipater Detail
Rev 2 October 16, 2010	Modified Chain Slack Adjustment Procedure

1. Introduction to Composites

Most people tend to call anything that isn't metallic or wooden a plastic. The components used in the sorter system are not plastic but various chemical compounds of polyurethane elastomers, additives, and fillers alloyed together to formulate a material with specific unique properties for a particular application. By varying the composition and ratios of these chemical compounds, a composite material can be tailored to perform very specific functions and operate in almost any environment. These compounds are fused together by a combination of heat and pressure.

Composite Types

There are two types of composites: Thermoplastic and Thermoset.
A thermoplastic can be recycled much like melting aluminum and reusing it. A thermoset once processed cannot be recycled.

Benefits of Composites

Weigh Less
The composite components weigh approximately 25% less than their metallic counterparts and with less weight also comes the benefit of requiring less power to operate. Also, this translates into less wear and tear on the system as well as the components.
Self-lubricating
Most of the contact components such as the wheels, bushings, and flange bearings are made of materials that have lubricating properties and will not require any lubrication.
Shock Resistant
Many of the composite components have been formulated to resist shock and impact loads. Therefore, they will be resistant to cracking and fracturing over time due to the repetitive stresses of impact shocks. In the event of a crash, the carriage yoke has been designed to absorb the energy and fracture across the mid-frame.

Therefore, considering the above benefits, the sorters should offer a longer useful service life over their metal counterparts.

Composite Killers

Excessive Heat
Exposing the components to excessive heat for a long period of time over 250 deg F will begin to break down the mechanical properties of the composite.
Solvents
The materials will react with some high strength solvents and acids such as: MEK, gasoline, and sulfuric acid.

2. System Overview

The functionality of the system has not changed as a result of the composite upgrade. The controls are the same and remain in-tact. The curves have been standardized to a 10 ft diameter. If the existing curves are 8 ft in diameter you will loose approximately one carriage length from the overall length of the system. (2.25ft). The system will run much quieter and smother and smother as a result of the composites.

3. Carriage Assembly (Fig 3.1)

Description

The carriage assembly is a four wheeled, mechanically operated transport vehicle. The carriage is bolted to the sorter chain, which moves the carriage around the sorter's track circuit. The carriage assembly consists of three principle components: yoke, index lever and carrier tray modules. The yoke module contains the wheel assemblies, index pin, carrier tray pivot pins, and supports the remaining carriage assembly modules. The index lever module contains the index pin seat and is the mechanical surface used for striking by the tip up assembly. The carrier tray module contains the attachment point for the index lever and the pivot pins for carrier tray tipping activation. The carrier tray module is attached to the yoke module through these pivots pins. The carrier tray module supports and is the attachment point for the carrier tray, which carries the mail item.

Theory of Operation

The carriage assembly mechanically transports mail items from the induction station to any of the sorter's coded sorting locations. Upon approaching the desired location, the appropriate tip up activates and places its roller into the path of the on-coming carriage assembly. The carriage assembly's index lever strikes and rises up onto the tip up roller. This action releases the carrier tray index pin and allows the carrier tray to pivot along the axis of the carriage assembly, allowing the mail item to slide off into the designated mail chute location and subsequent collection container.

After discharge, the carriage assembly continues on the track circuit, passes through the tray straightening device, which rights the carrier tray, reseating the index pin and locking the carrier tray back into place. The carriage assembly completes the track circuit returning to the induction station for another sortation assignment.

Specifications/Characteristics

Table 3-1
Carriage Assembly Characteristics

SPECIFICATIONS / CHARACTERISTICS	DESCRIPTION
Carriage Assembly (fully assembled)	(Not including Tray or Mail Catchers)
Outside Dimensions:	
Height	12-1/2 inches
Width	10-1/2 inches
Length	20 inches
Weight	21.25 pounds

Assemblies

Composite carriages are fully assembled before shipment. When disassembly is required for component replacement or carriage re-build, reverse the assembly steps outlined below. Be sure to follow these assembly steps in their entirety when re-assembling the carriage. Failure to follow these assembly steps may result in premature failure of carriages and/or its components.

WARNING

Eye protection should be used for all assembly steps (below) to prevent injury.

Yoke Assembly

Wheels

To prevent bearings from rusting to the axle, wipe each axle with an oily rag prior to wheel installation. Position Yoke body (P/N 02-22-0320) on its side and place a wheel (P/N 02-22-0300) on to the axle stub. Place a washer (P/N 03-80-1052) on and axle bolt (P/N 03-80-1060) and thread the axle bolt into the axle stub until finger tight. Make certain that the washer is seated against the wheel bearing race, and using an appropriate torque wrench, tighten the axle bolt to 35-40 ft-lbs. Repeat the above procedure for the remaining three wheels.

Roller Shaft, Centering Roller

Position the yoke body (P/N 02-22-0320) upright on the four wheels. Put the retaining ring (P/N 03-80-1047 into the narrow groove of the roller shaft (P/N 02-

30-0030). Apply a drop of oil to shaft and coat evenly. Place roller (P/N 02-24-0359) onto the roller shaft with a spacer (P/N 02-30-0061) both above and below the roller on the shaft. Insert the roller shaft into the center vertical hole in the yoke body. Apply a drop of oil to each of two set screws (P/N 03-80-1048) and thread them into the yoke body, just shy of engaging the roller shaft. Slide a .020 flat feeler gauge between the roller and the upper most spacer. Press the roller shaft firmly down trapping the feeler gauge, and torque the pair set screws to between 30-35 in-lbs against the roller shaft. Remove the feeler gauge and check to see that the roller turns freely. (Note: There should not be more than .020 of axial float in the roller.)

Bumpers
Insert the four bumpers (P/N 02-24-0330) into the four mating holes in the yoke body. Pull the small ends of the bumpers down until the bumper heads are seated against the yoke body.

Carrier Tray Assembly
Apply a drop of oil to the set screw (P/N 03-80-1048) and thread the set screw into the bottom of the carrier tray (P/N 02-22-0330) to a position just shy of the pivot hole. Pre-assemble the front pivot pin (P/N 02-24-0300) into the front yoke body pivot hole (from inside out) so that the pin is engaged in the hole but not protruding out the front of the yoke body. Place the carrier tray on top of the yoke body (P/N 02-22-0320) with the pivots of the carrier tray forward of their corresponding pivot holes on the yoke body. Align the pivot holes and slide the front pivot pin out to engage the pivot hole on the carrier tray. Insert the rear pivot pin (P/N 02-24-0310) (from inside out) through the pivot hole in the carrier tray and into the pivot hole of the yoke body. Note: the rear pivot pin is longer than the front pivot pin, and when installed properly the pin heads should be facing each other. Push the head of the rear pivot pin out to remove all clearance between the carrier tray and yoke body, and then tighten the set screw (P/N 03-80-1048) to between 30-35 in-lbs of torque. Place screw (P/N 03-80-1055) through plastic washer (P/N 02-24-0353), and thread the screw into the outward facing hole in the center of the front pivot pin, until it is snug. (Do not over tighten or you will strip out the hole in the pivot pin.)

Index Lever Assembly
Bumpers & Pad
Insert Pad (P/N 02-24-0340) into the lock notch in the index lever (P/N 02-22-0340) Insert two bumpers (P/N 02-24-0330) into the corresponding holes in the index lever, and pull the small ends of the bumpers through until the bumper heads are seated.

Index Lever Installation into Overall Assembly
Place the Index Lever (P/N 02-22-0340) inside the Yoke/Carrier Tray assembly, by moving its rear arms around the narrow lower portion of the Yoke body and then rotating the Index Lever into rough forward alignment.

Place Spring (P/N 03-80-1062) on its locating stub on the forward part of the index lever. Raise the index lever into position so that the spring seats on the corresponding stub on the underside of the Carrier Tray (P/N 02-22-0330) and so that the pivot holes for the index lever align with the corresponding holes in the carrier tray. Insert the Index Lever Bolt (P/N 03-80-1061) through the Index Lever, and Carrier Tray and engage Locknut (P/N 03-80-1049) on the opposite end. Tighten the locknut until all the clearance between the Index Lever and Carrier Tray is removed, but so that the Index Lever is free to rotate up/down without drag.

Note:
Over tightening of the locknut will prevent the proper operation of the carrier tray pivot pin.

Index Lock-pin
Slide the Index Lock-pin (P/N 02-24-0357) through the corresponding hole in the front of the Yoke Body (P/N 02-22-0320). (The cross drilled hole in the Lock-pin should be closest to your hand as you install it in the Yoke Body.) Raise the Index Lever against spring pressure and slide the Index Lock-pin into the notch of the index lever, then release the Index Lever allowing it to drop onto the Index Lock-pin. Align the cross drilled hole in the Index Lock-pin with the mating hole in the Yoke body, and insert Spring Pin (P/N 03-80-1063) to secure the Index Lock-Pin into the Yoke Body.

Figure 3.1
Composite Carriage Assembly

NOTES: UNLESS OTHERWISE SPECIFIED

ITEM NO.	QTY.	PART NO.	DESCRIPTION
1	1	02-22-0320	Carriage Yoke
2	6	02-24-0330	Carriage Bumper
3	2	01-11-5483	Mail Catcher
4	1	02-22-0330	Carriage Tray Carrier
5	1	02-22-0340	Carriage Index Lever
6	1	02-24-0340	Bumper, Index Plate
7	4	02-22-0300	Carriage Wheel
8	1	02-24-0310	Carriage Pivot Pin - Rear
9	1	02-24-0300	Carriage Forward Pivot Pin
10	1	02-24-0357	Carriage Index Lever Lock Pin, Round
11	1	03-80-1063	Pin, Spring .188 OD X 1L
12	4	03-80-1052	Flat Washer, 12MM 125DIN, Zinc
13	4	03-80-1060	Hex HD Screw, .500-13 X .750, Zinc Plated, Nylock
14	1	03-80-1061	Hex HD Screw, .500-13 X 9.5, Zinc Plated
15	1	03-80-1049	Locknut, .500-13 , Zinc
16	1	03-80-1055	Self-Tapping Screw, .250-20 X .625
17	1	02-24-0353	Washer, Pivot Pin
18	3	03-80-1048	Set Screw, SKT-CUP-PNT, .313-18 X 0.500
19	4	03-80-0080	Sheet Metal Screw, Hex HD, Slotted, #10 X 1
20	1	03-80-1062	Compression Spring, .72 O.D. X 2.0L .065 Music Wire
21	1	02-30-0030	Roller Shaft, Short
22	1	02-24-0359	Carriage Centering Wheel
23	2	02-30-0061	Spacer .20 Long
24	1	03-80-1047	External Retaining Ring, .500

REV	DESCRIPTION	DATE	APPROVED
-	Original Engineering Release	6/18/05	MVB
1	Change to BOM , Ref Only Notes	11/23/05	MVB

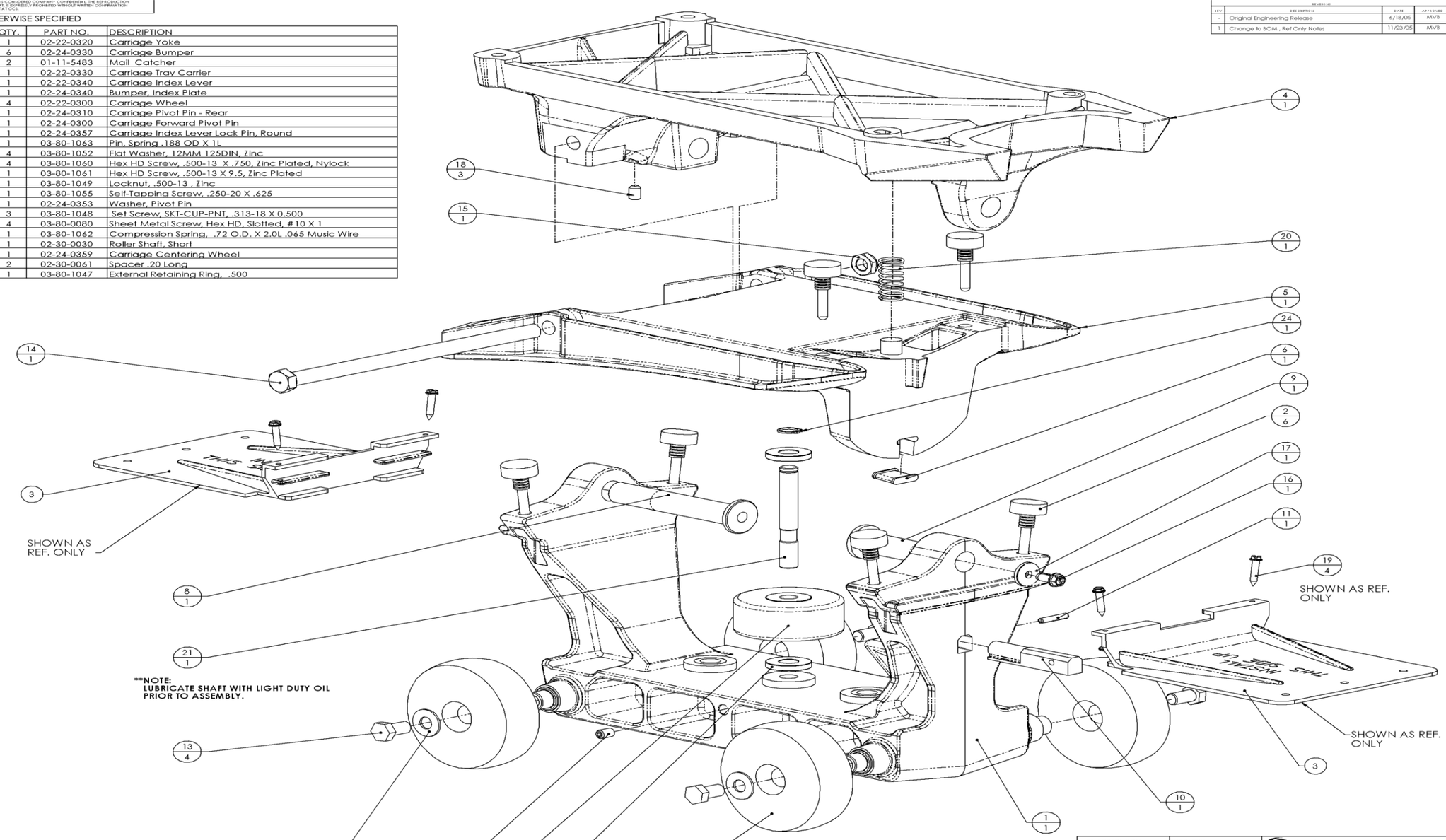

THIRD ANGLE PROJECTION

COSMETIC APPEARANCE IS AS IMPORTANT AS FUNCTION TO GCS. ALL MACHINED SURFACES ARE TO BE FREE FROM MACHINE TOOL MARKINGS ARE CRITERIA FOR ACCEPTANCE OR REJECTION OF PARTS OF EQUAL IMPORTANCE TO PHYSICAL DIMENSIONS.

INTERPRET DRAWINGS PER ASME/ANSI Y14.5M-1994
ALL MACHINED SURFACES ARE TO BE FREE FROM MILL SCALE, SCRATCHES, DENTS, STEPS OR FLAWS. PROCESSES SUCH AS VAPOR HONING, TUMBLE DEBURRING, BEAD BLASTING OR SAND BLASTING UNLESS SPECIFICALLY CALLED OUT ON THE DRAWING ARE NOT TO BE USED WITHOUT EXPRESS AUTHORIZATION FROM GCS ENGINEERING DEPARTMENT.

DO NOT SCALE DRAWING

UNLESS OTHERWISE SPECIFIED: TOLERANCE: ANGULAR ±0.5° DECIMAL - INCHES .X ±.01 .XX ±.01 .XXX ±.005 .XXXX ±.0005 ✓ 125 µ RMS

MATERIAL: --
FINISH: --

PROJECT NUMBER

	APPROVAL	DATE
DRAWN	MVB	6/18/05
CHECKED		
REF ENG	BCE	6/18/05
APPROVED		

Globe Composite Solutions, Ltd.
204 Beach Street
Rockland, MA 02370
TEL 781.871.5300 FAX 781.871.6631
www.globecomposite.com

Horizontal Carrousel Carriage Assy.
Patents Pending

SIZE F | CAGE CODE | DWG NO 01-11-0202 | REV 1
SCALE 1:1 | FILE NAME 01-11-0202 Carriage Assy. Horizontal Carrousel | SHEET SHT 2 OF 2

4. Tip Up Assembly (Fig 4.1, 4.2, 4.3)

Description
The tip-up assembly is an air operated electrically controlled actuator. The tip-up assembly is attached to the track wall by means of a variable location composite mounting block available from GCS.

Theory of Operation
The tip-up assembly, when electrically actuated, places a roller into the path of a carriage assembly's index lever. The index lever rides up on the tip-up assembly's roller and unlatches the carriage tray to tip the mail item off the tray and into the desired sort location. After actuation, the tip up assembly roller and actuator arm, retract out of the carriage assemblies' line of travel.

Specifications/Characteristics

Table 4-1
Tip up Assembly Characteristics

SPECIFICATIONS / CHARACTERTICS	DESCRIPTION
Tip up Assembly	(Not including air cylinder, clevis, fitting)
Outside Dimensions:	
Height:	
Extended	14-1/2 inches
Retracted	11-1/2 inches
Width	3 inches
Depth	6-1/2 inches (When retracted)
Tip up Assembly Mount	
Outside Dimensions:	
Height	9 inches
Width	3-1/2 inches
Depth	4-1/2 inches

Assembly of Tip-Up Mechanism (See fig 4.1)
Place the Roller (P/N 02-22-0310) between the two arms of the Lever (P/N 02-22-0210) so that the holes of the Lever align with the hole through the center of the Roller. Insert Clevis Pin (P/N 03-80-1141), through one side of the Lever Arm, Roller, and then through the opposite side of the lever arm. Install a cotter pin (P/N 03-80-1143) on the opposite end of the clevis pin through the hole and flare out the cotter pin so that it lays flat against the side of the Tip Up Base (P/N 02-22-0200). Position the Lever Arm/Roller assembly between the uprights of the Tip-Up Base, so that the hole in the Lever Arm aligns with the mating holes in the Tip-Up Base. Insert Clevis Pin (P/N 03-80-1141) through one side of the Tip-Up Base,

Lever Arm assembly, and then through the opposite side of the Tip-Up Base. Install and flare out a second Cotter Pin (P/N 03-80-1143) on the opposite end of the Pivot Pin. Place the Cylinder Rod end (not included) in between the opening of the Lever Arm so that the hole in the rod end aligns with the hole in the lever arm. Insert Clevis Pin (P/N 03-80-1044) through one side of the lever arm, rod end, and then through the opposite side of the lever arm. Place washer (P/N 03-80-1042) over the exposed end of the Clevis pin, and then insert Hairpin (P/N 03-80-1043) through the cross-drilled hole in Clevis Pin. (Make sure that the Hairpin is positioned around the diameter of the pin not over the end of the pin.) Repeat this step at the pivot end of the air cylinder except use Clevis Pin (P/N 03-80-1045). (This is the shorter of the two Clevis Pins.)

Assembly of Index Mount to Track and Tip-Up to Index Mount (See fig 4.2)

Index Mount to Track

The Tip-Up indexing Mount (P/N 02-22-0220) is designed to lock into any straight track section (on either side) except where adjoining tracks are bolted together. (This gives the end user a great deal of flexibility as to where to position the Tip-Up mechanism for optimum performance.) The notch features on the top and outside of the track section engage mating features of the indexing mount with a slight amount of resistance so that they lock together. A soft mallet may be required to fully seat the Indexing mount both vertically and horizontally. After the Indexing mount is seated into the track section, it is necessary to transfer drill the bottom flange of the track so that you can bolt through the bottom of the Index mount, and through the track flange using 2” long 5/16-18 Hex Head Bolts with washers and lock washers, as illustrated. (You will need to Mark the Holes and then remove the Indexing Mount to drill the holes.) Fasten the Tip-Up Index Mount also to the box channel that supports the track. In this case you will need to drill and tap 5/16-18 through the wall of the Steel box channel in-line with the holes in the Index Mount. The 2” long Hex head bolts can be used in this case as well. The lock-washer should be re-positioned between the head of the bolt and the washer.

Mounting the Tip-Up Mechanism to the Index Mount

The Tip-Up mechanism can be installed on either side of the Indexing Mount but the preferred orientation is to mount the Tip-Up on the side of the mount that faces the direction of carriage travel. In this orientation the yellow bumper on the Tip-Up base helps to support the Lever Arm, when the carriage engages the Tip-Up roller. The Indexing Mount and Tip-Up assembly will mount in locations both on the inside and outside of the straight track section. To maintain the preferred orientation of the Tip-Up mechanism to the direction of carriage travel, install the Tip-Up assembly accordingly, to one side of the Indexing Mount or the other. Bolt through the slots provided in the Indexing Mount (P/N 02-22-0220) and into the three (3) 5/16-18 tapped holes provided in the base of the Tip-Up assembly. The slots provide a vertical position adjustment for the entire Tip-Up assembly. The Tip Up location should be adjusted to the dimensions shown in Fig 4.3 using the Tip Up Alignment fixture and following the instructions noted.

Figure 4.1
Tip-up Assembly

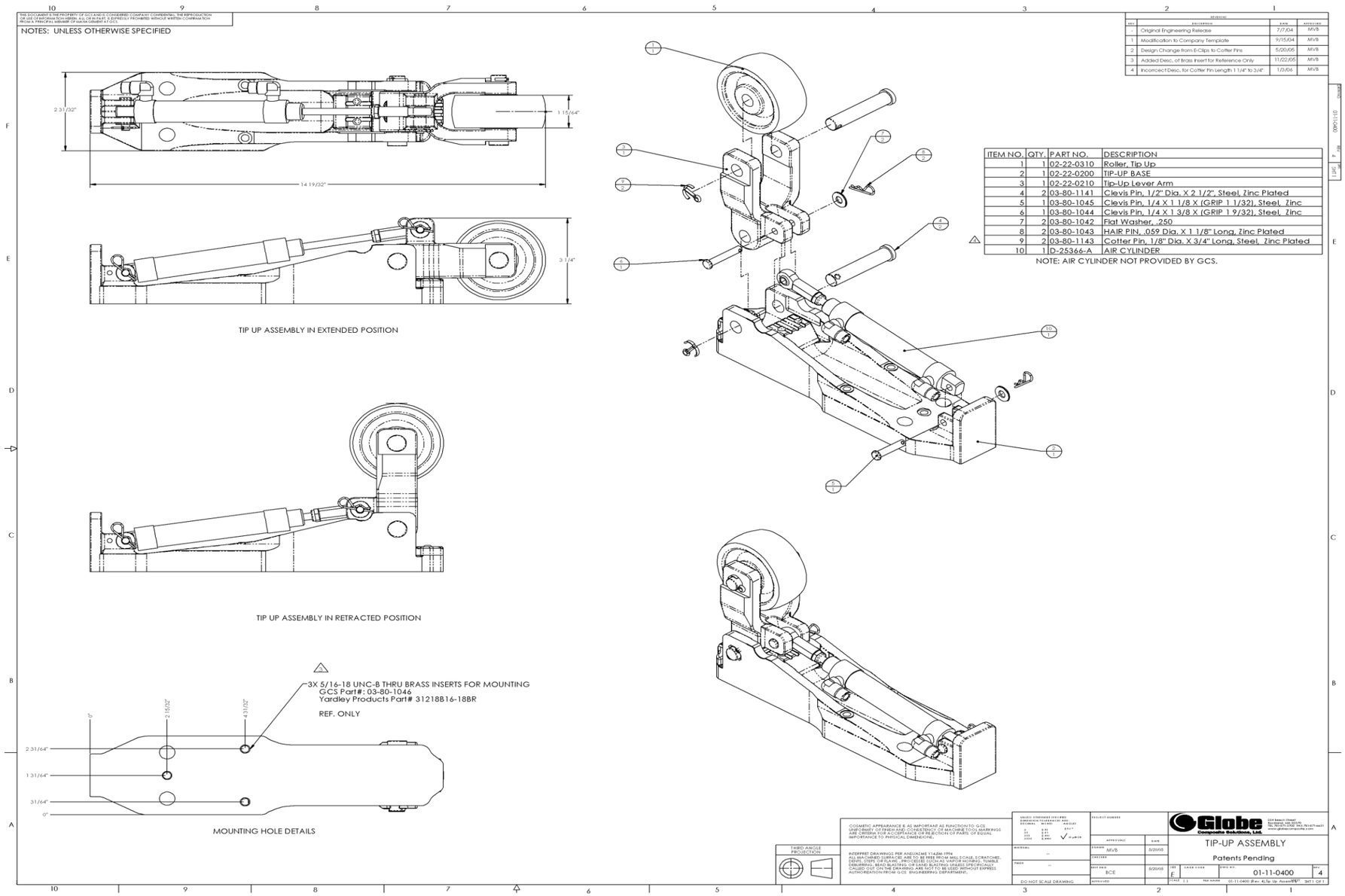

Figure 4.2
Tip-up Mounting to Track & Tip-up Mount Details

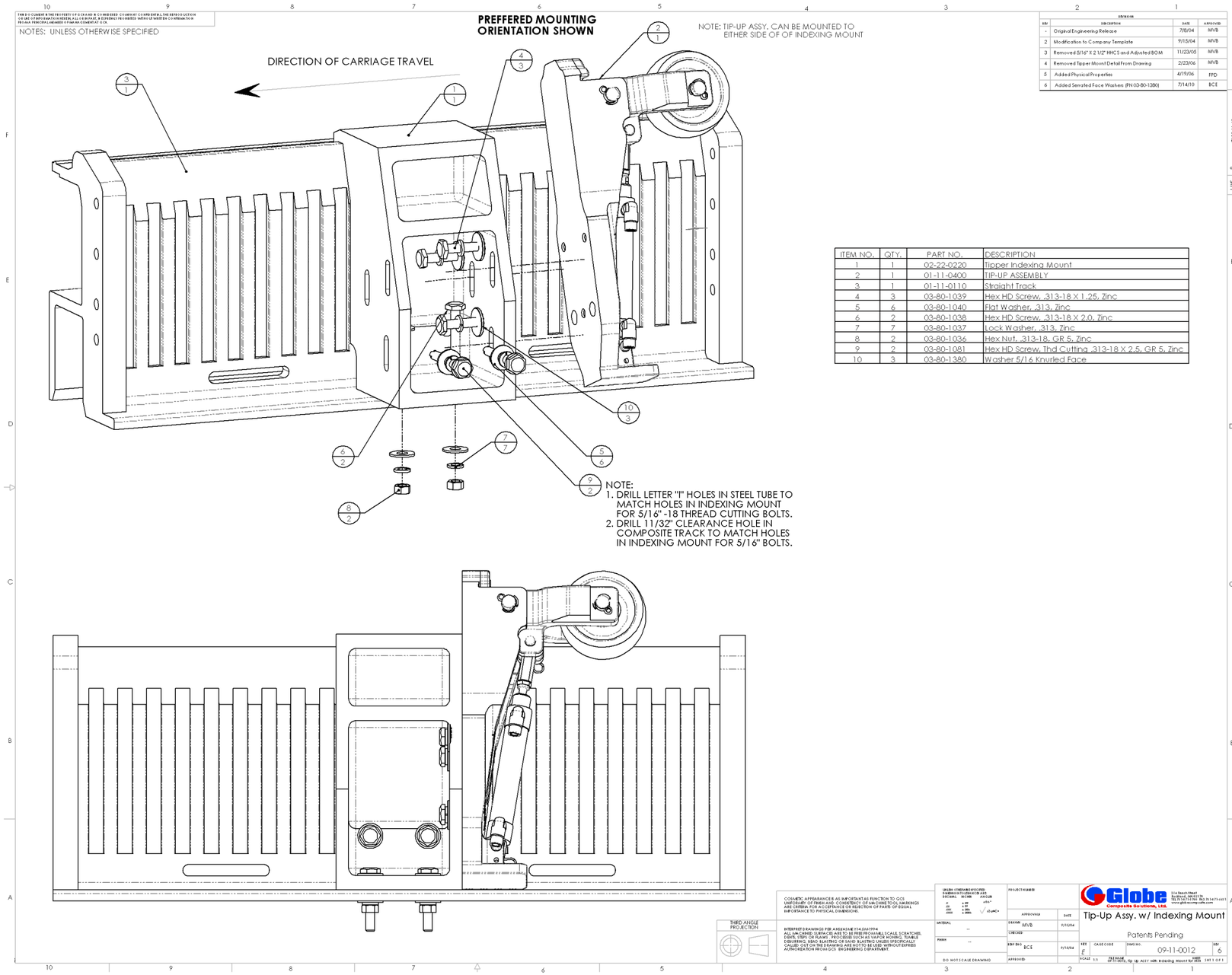

ITEM NO.	QTY.	PART NO.	DESCRIPTION
1	1	02-22-0220	Tipper Indexing Mount
2	1	01-11-0400	TIP-UP ASSEMBLY
3	1	01-11-0110	Straight Track
4	3	03-80-1039	Hex HD Screw, .313-18 X 1.25, Zinc
5	6	03-80-1040	Flat Washer, .313, Zinc
6	2	03-80-1038	Hex HD Screw, .313-18 X 2.0, Zinc
7	7	03-80-1037	Lock Washer, .313, Zinc
8	2	03-80-1036	Hex Nut, .313-18, GR 5, Zinc
9	2	03-80-1081	Hex HD Screw, Thd Cutting .313-18 X 2.5, GR 5, Zinc
10	3	03-80-1380	Washer 5/16 Knurled Face

REV	DESCRIPTION	DATE	APPROVED
-	Original Engineering Release	7/8/04	MVB
2	Modification to Company Template	9/15/04	MVB
3	Removed 5/16" X 2 1/2" HHCS and Adjusted BOM	11/23/05	MVB
4	Removed Tipper Mount Detail From Drawing	2/22/06	MVB
5	Added Physical Properties	4/19/06	FPD
6	Added Serrated Face Washers (PN 03-80-1380)	7/14/10	BCE

Figure 4.3
Tip-up Alignment Fixture & Installation Process

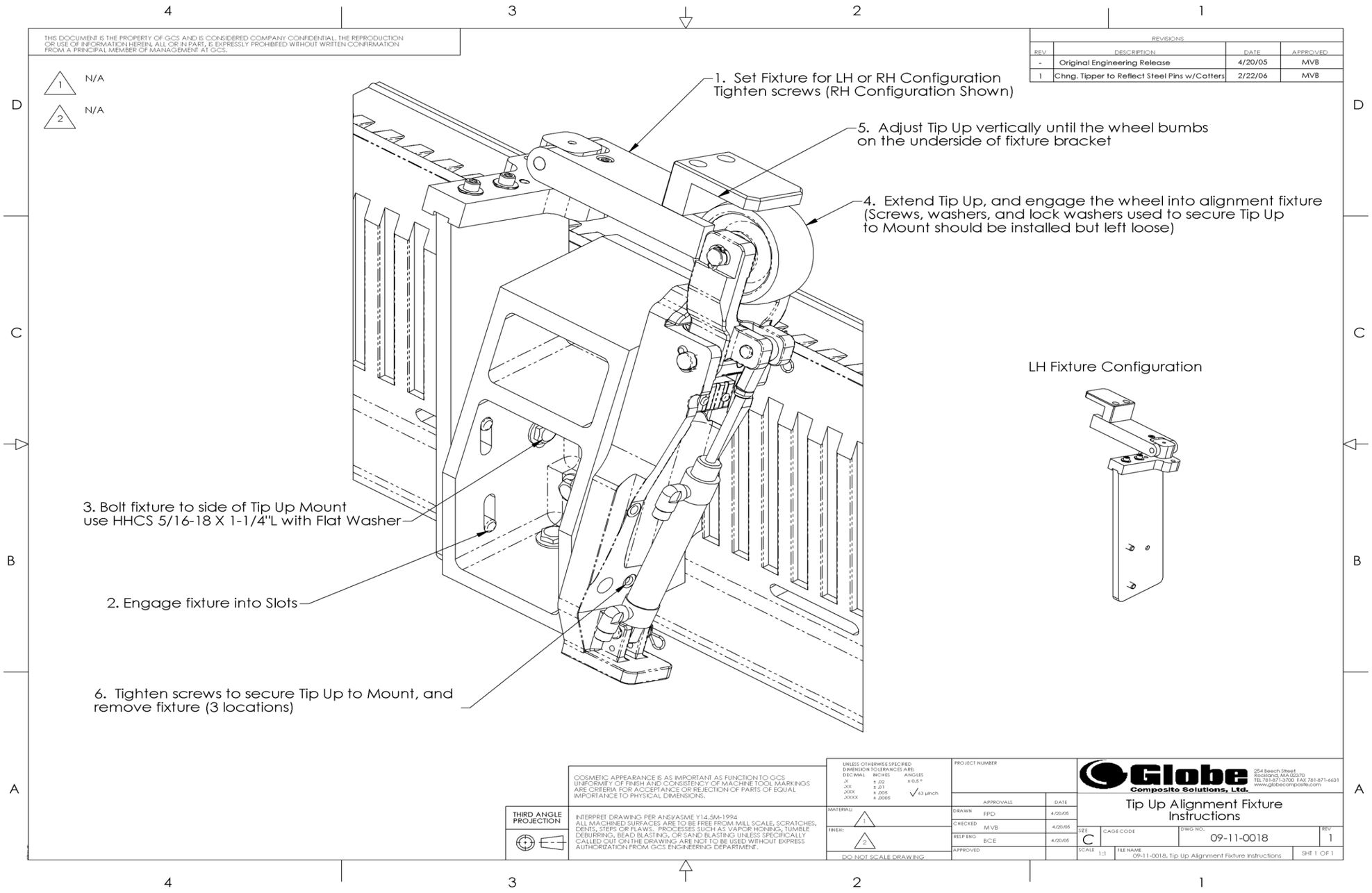

5. Chain Assembly

Description
The composite chain is comprised of a series of alternating mated composite links. Each chain link is attached to adjoining links by mated pinions, and flange bearings. Selected chain links possess two threaded modules for carriage assembly attachment. The chain is moved along with the aid of composite wheels located at each link pivot.

Theory of Operation
The composite chain's purpose is to move the carriage assemblies around the sorter track circuit. The carriage assemblies are attached to the chain by two bolts extending down through the carriage assembly yoke into threaded modules within the track links. The track is propelled by a toothed bull gear mounted on a vertical axis, usually located at one end of the sorter track circuit.

Specifications/Characteristics

Table 5-1
Chain Assembly Characteristics

SPECIFICATIONS / CHARACTERISTICS	DESCRIPTION
Chain Assembly (P/N 01-11-5522)	
Outside Dimensions:	
Height	4-1/4 inches
Length	18ft
Width (Over Wheel)	3 inches
Wheel Diameter	3 inches
Weight	63 pounds per 18ft length (3.5 pounds/ft)

Assembly (See fig 5.1)

Install Flange bearings (P/N 02-24-0364) into corresponding hole in chain link(P/N 02-24-0363). Make sure that the anti-rotation feature on the underside of the bearing flange engages in the corresponding hole location on the chain link. Loosely assemble a pair of chain links around a wheel bearing (P/N 02-24-0120). Use the larger diameter but shorter length bosses on the chain link facing one another on both sides of the bearing. With another pair of chain links assemble the smaller diameter, but longer end of the chain link, through the flange bearings and into the wheel bearing loosely assembled in step 2. (The chain links should be flush with the face of the flange bearings.) (Use a blunt mallet to assist in assembly in required.) Install Chain pin (P/N 02-24-0361) through connected links, and once through, install washer P/N (03-80-1170) and cotter pin (P/N 03-80-1169). Flare out cotter pin so that it lays flush with the face of the washer. The chain pins should be installed such that the pin heads are on the same side of the chain as the boss link (P/N 02-24-0362).

Continue assembly in this manner until you have assembled the desired length of chain. For 27” pitch carriage mounting, use a Chain Link with Bosses (P/N 02-24-0362) every third link facing up. All other links are the same (P/N 02-24-0363).

CAUTION

Do not force the links together by using a sharp instrument as permanent damage to the link pinion and race may occur.

Check to make sure that all washers and cotter pins are installed properly and that the cotter pin is flared out and resting against the face of the washer on the threaded side of the Chain Boss Link.

Chain Installation

GCS manufactures chain in 18 ft lengths. To assemble chain on site it is necessary to couple the tail end of one chain to the head of the next. All the components needed, are pre-attached or banded to the very ends of the chain. Remove the Chain Pin by first removing the cotter pin, and washer. Cut the wire tie that holds the wheel to the end of the chain. Assemble the components at the connected joint as described above. Re-install the Chain Pin, washer and cotter pin, flaring the cotter pin up against the face of the washer.

Carriage Assembly to Chain
The chain must be lifted to a height matching the carriage installation height during the installation process, so that the chain is not stressed in the vertical plane, and is free to pivot in the horizontal plane. Carriages are attached to the chain with two Hex Head bolts, 1/2-13 X 3-1/2L with lock washers under the head, and tightened to a torque of approximately 25 ft-lbs. Carriages should be bolted to the chain so that the carriage wheels run straight in the track after the bolts are tightened and slack is removed from the chain. Carriages that are not bolted on straight will have pre-mature wheel wear.

Adjusting Chain Slack (Static Method) Fig 5.2

Adjust bull gear position to take out gross chain slack, being sure not to stretch or tension chain. Jog bull gear <u>at slow speed</u> and look for chain slack or whip on the exit side of the bull gear. Stop the line and adjust the bull gear out in a small increment as needed. Jog the bull gear <u>at slow speed</u> again while observing the chain slack or whip on the exit side of the bull gear. Check the chain slack using the procedure illustrated in Figure 5.2 and as follows: Make sure the line is stopped and locked out/tagged out. Use a 100lb dynamometer Measure chain slack at the exit side of the bull gears slip joint, about 5 teeth back. This position ensures that the chain is in contact with the sprocket teeth and tension is present. Place the hook from the pull scale as close as possible to the centerline of the pivot pin on the chain (how the hook is placed on the chain is installers option). Pull until a 45 to 50lb force is obtained. This force should move the chain wheel 3/16” to 1/4” away from the sprocket tooth once the chain is adjusted properly. Run the sorter for 8 hours and repeat steps above.

Warning: Over-tensioning the chain, beyond taking out the running slack, could damage the chain and/or reduce overall chain performance and life expectancy

Adjusting Chain Slack using a Strobe/Tachometer Fig 5.2

This procedure is an alternative to step outlined above and accomplished by observing the chain engagement to the sprocket teeth by standing under the bull-gear and aiming the strobe at a particular sprocket tooth while running the sorter at line speed. It is first necessary to take out the gross chain slack using steps 1 through 4 outlined in section 7.2.4.6 above. The strobe is then utilized to fine tune the running chain slack as follows. Adjust the strobe speed to give several pulses of the same sprocket tooth. The strobe speed should be set to 3 to 5 times the actual speed of the passing sprocket teeth. *(Each individual may prefer different speeds in order to get the best stop action of the chain engagement.)* The first 3 to 4 teeth at the entrance side will be in full engagement as they are the main load carrying teeth. If any chain slack is present, several of the sprocket teeth/chain wheel engagement points will show a gap of approximately 1/4" to 3/8" space. Move the strobe to different positions around the bull-gear to get an average reading. *(The same tooth will not have a gap present each time due to small variations of the chain pitch or sprocket pitch.)* A properly adjusted chain should show some space at various locations. If no space is observed, then this is an indication of excessive chain tension. At no time should the sprocket tooth/ chain wheel gap exceed ½". If excessive gap is present, the drive should be moved in not more than ½' increments until the proper chain slack is accomplished.

Warnings:
Over-tensioning the chain, beyond taking out the running slack, could damaged the chain or reduce overall chain performance and life expectancy. Before using the strobe and running at line speed the chain slack must not be excessive. (This process is reserved for fine tuning the chain slack not for identifying gross slack.) All adjustments must be made with the line stopped and locked out.

Chain Link Replacement

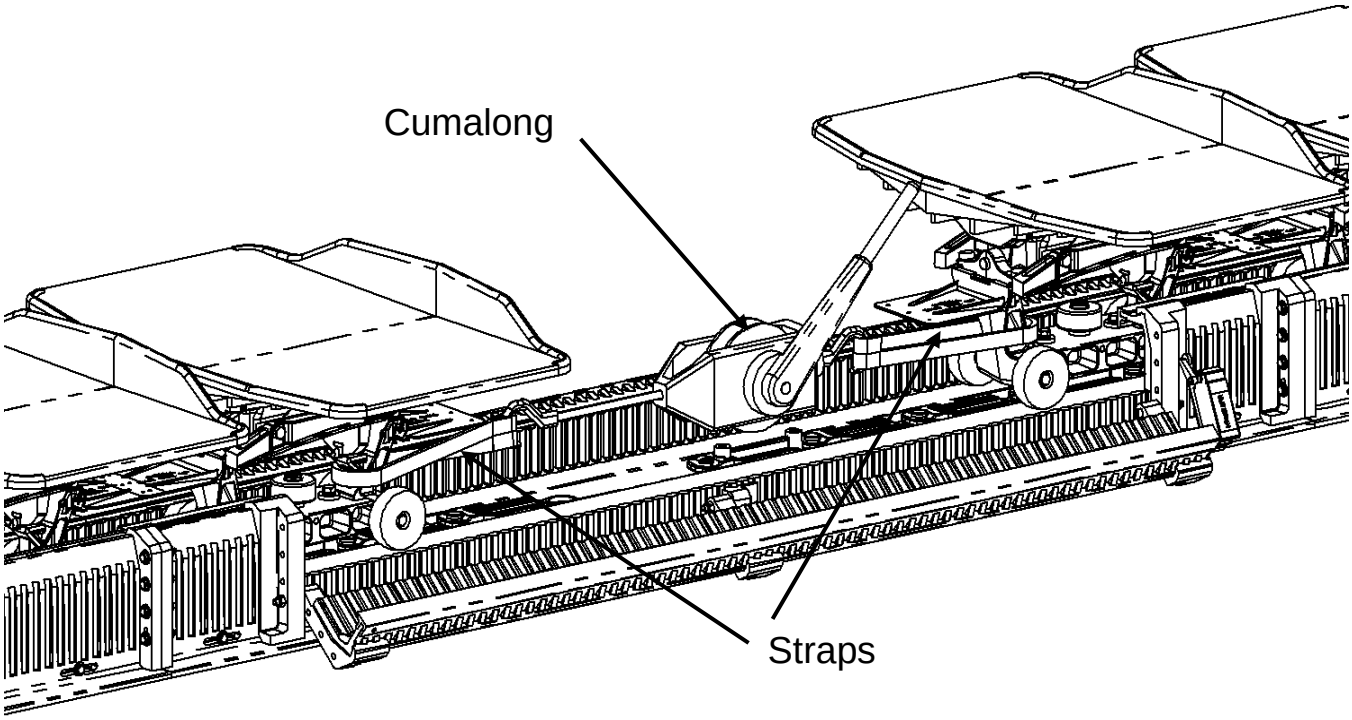

Chain Replacement Procedure with Chain Installed on Sorter

1. Jog broken chain section to maintenance door installed in the sorter system.
2. For safety, lock and tag out sorter system so that it cannot be accidentally activated.
3. Remove access door retaining bolts and open access door to perform chain repair.
4. Remove the necessary number of carriages to repair broken chain.
5. Remove the cotter pins and chain pins from the broken chain links as needed. (Note: If necessary the use of a cumalong and nylon straps as shown above can be used to relieve tension on chain link joints.)
6. Separate upper and lower chain links until the male boss end clears the female end of the other link.
7. Install new chain links as needed and reinstall all chain pins, washers and cotter pins.
   (Note: Refer to sorter system maintenance manual for chain assembly details.) Ref fig 5.1
8. Remove cumalong and nylon straps if used.
9. Install removed carriages to chain and ensure carriages are straight and parallel to conveyor centerline.
   when attachment bolts are tightened.
10. Torque carriage to chain attachment bolts to 35 ft-lbs.
11. Close maintenance access door and reinstall access door retaining bolts.
12. Remove lock and tag from sorter drive unit.

Figure 5.1
Chain Assembly

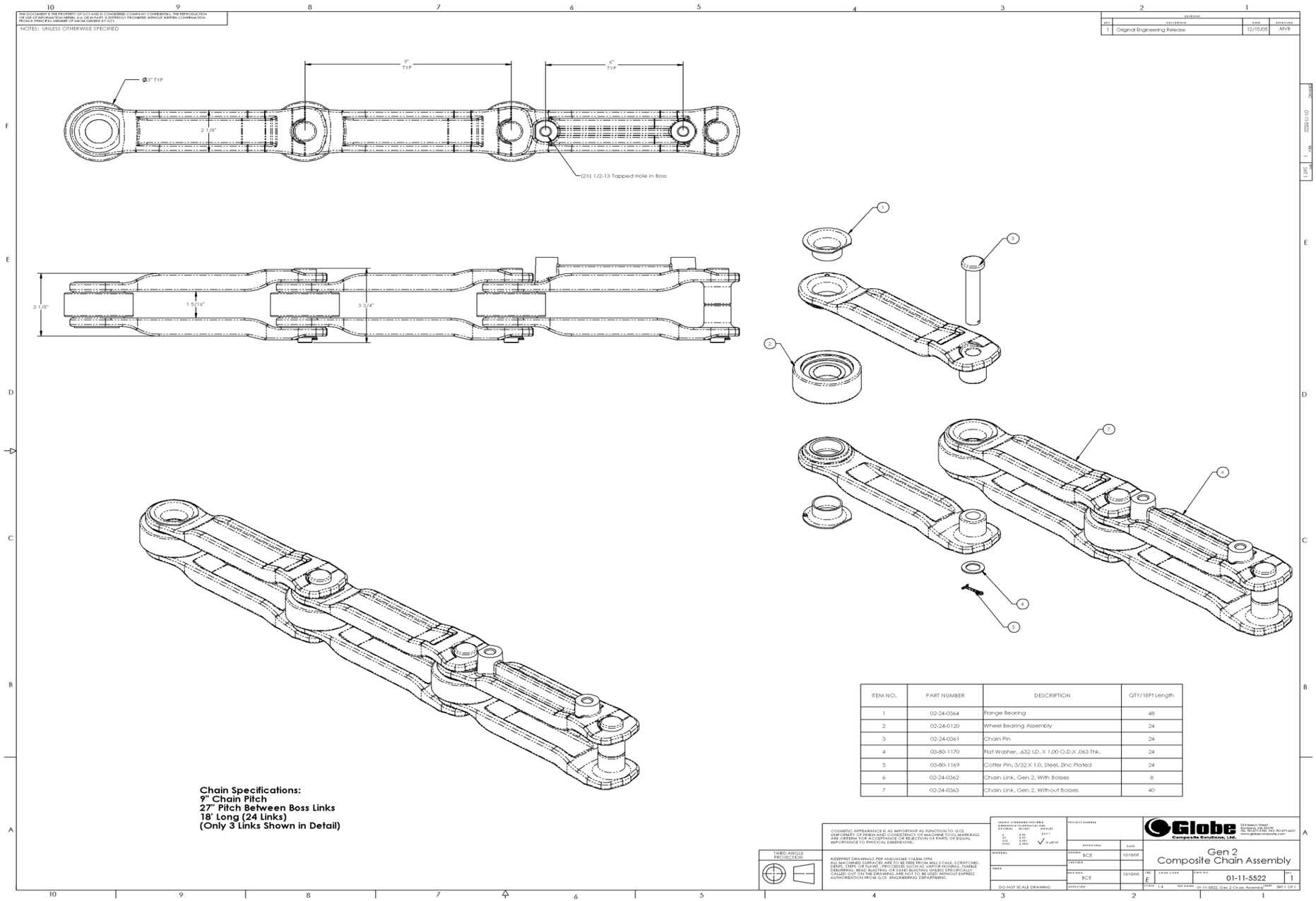

ITEM NO.	PART NUMBER	DESCRIPTION	QTY/18Ft Length
1	02-24-0364	Range Bearing	48
2	02-24-0120	Wheel Bearing Assembly	24
3	02-24-0361	Chain Pin	24
4	03-80-1170	Flat Washer, .632 I.D. X 1.00 O.D.X .063 Thk.	24
5	03-80-1169	Cotter Pin, 3/32 X 1.0, Steel, Zinc Plated	24
6	02-24-0362	Chain Link, Gen 2, With Bosses	8
7	02-24-0363	Chain Link, Gen 2, Without Bosses	40

Figure 5.2
Chain Tensioning Procedure

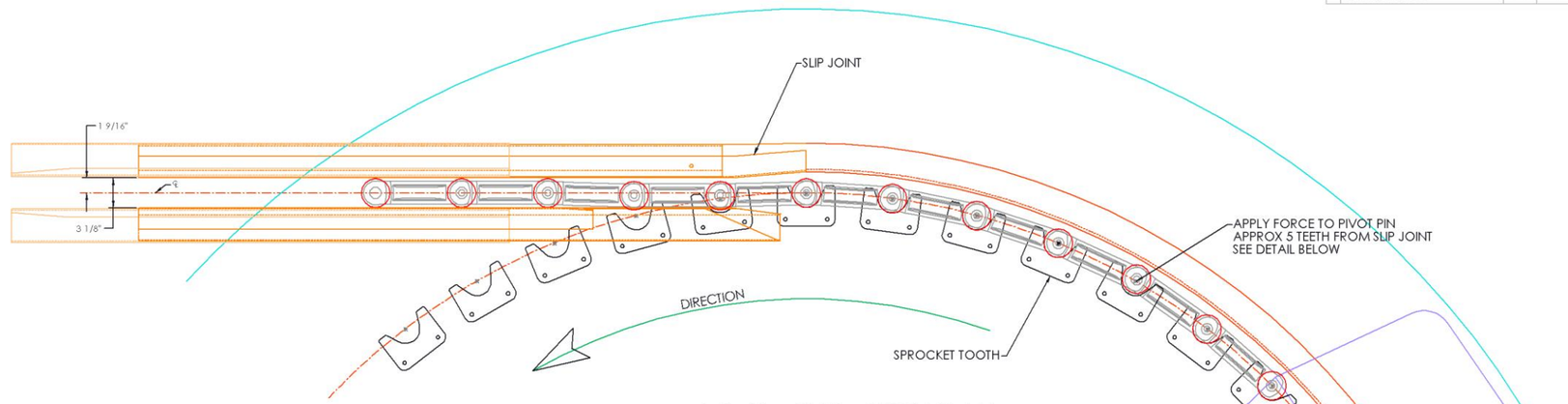

Bottom View of Bull Gear At Exit Side Slip Joint
(LEFT HAND SHOWN, RIGHT HAND IS OPPOSITE)

PROCEDURE:

1. THIS PROCEDURE IS CONDUCTED WHILE THE BULL GEAR IS STOPPED, TURNED OFF, AND TAGGED OUT.
2. USE A 100LB. DYNAMOMETER (01-11-0122) AND CHAIN TENSIONING FIXTURE 01-11-0123.
3. MEASURE CHAIN SLACK AT THE EXIT SIDE OF THE BULL GEARS SLIP SLIP JOINT, APPROX 5 TO 6 TEETH BACK. THIS POSITION ENSURES THAT THE CHAIN IS IN CONTACT WITH THE SPROCKET TEETH AND TENSION IS PRESENT.
4. APPLY TENSION TO THE CHAIN USING THE TENSIONING FIXTURE (01-11-0123 SHOWN BELOW).
5. ATTACH 100LB DYNAMOMETER TO TENSIONING FIXTURE. PULL UNTIL A 45-50lbf IS OBTAINED. THIS FORCE SHOULD MOVE THE CHAIN WHEEL 3/16" TO 1/4" AWAY FROM THE SPROCKET TOOTH ONCE THE CHAIN IS ADJUSTED PROPERLY.
6. RUN SORTER FOR 8hrs AND REPEAT STEPS 3 TO 5.

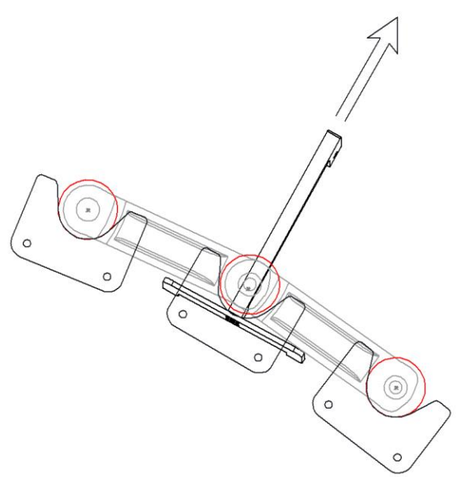

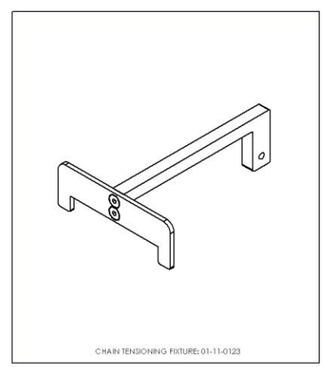

DETAIL - A

CONFIRMING PROPER CHAIN SLACK USING A STROBE/TACHOMETER:

This procedure should be used after completing steps 1 through 5 (above) and is based on observing the chain engagement to the sprocket teeth by standing under the bull-gear and aiming the strobe at a particular sprocket tooth while running the sorter at line speed.

Adjust the strobe speed to give several pulses of the same sprocket tooth. The strobe speed should be set to 3 to 5 times the actual speed of the passing sprocket teeth. *(Each individual may prefer different speeds in order to get the best stop action of the chain engagement.)*

The first 3 to 4 teeth at the entrance side will be in full engagement as they are the main load carrying teeth.

If any chain slack is present, as you move from the entrance side of the Bull Gear around towards the exit side of the Bull Gear, the sprocket teeth/chain wheel engagement points will show a gap of approximately ¼" to 3/8" of space. (Special attention should be paid to BG exit where chain re-enters track.)

Move the strobe to different positions around the bull-gear to get an average reading. *(The same tooth will not have a gap present each time due to small variations of the chain pitch or sprocket pitch.)*

A properly adjusted chain should show some space at various locations. If no space is observed, then this is an indication that the chain is in tension which is undesirable and could cause damage and/or reduced chain life.

At no time should the sprocket tooth/ chain wheel gap exceed ½".

If excessive gap is present, the drive should be moved in not more than ½" increments until the proper chain slack is accomplished.

Globe Composite Solutions, Ltd.
CHAIN SLACK ADJUSTMENT ILLUSTRATION
09-11-0022

6. Track Assemblies

Description

The composite track sections consist of: straights, curves, custom length straights, expansion joints, and access door sections. The **Straight Track Sections** are bolted on twelve-inch centers onto steel box beams and are bolted to each other through end flanges. The straight track sections also provide mounting and alignment for the tip up assemblies. **(See fig 6.1)**

The **Curve Sections** are similarly bolted to each other and straight sections through end section flanges. The curve sections are held in place by steel “holdbacks” mounted on the interior and exterior surfaces of each curve**. (See fig 6.2)**

The **Custom Length Straight Track** sections are cut to size for either chain stretch requirements or to complete a track circuit which does not correspond to a nominal track length. In some cases special length tracks must be cut on site at assembly. Special Snap on flanges can be secured to the cut end of the track in 1” increments to make any length of track desired, and to allow the cut end of the track to be bolted in like a standard track length**.**

Access Door Track Sections open to allow carriages to be removed or replaced on the chain. Access doors come in 4ft and 6 ft sizes. Sizes and locations are determined by the individual sites. **(See fig 6.3)**

Expansion Joint Track Sections allow for building expansion and provide a sliding joint for the track to expand and contract over time. **(See fig 6.4)**

Theory of Operation

The sorter composite track provides for the running surface and support of carriage assemblies, houses the chain seat channel and race, provides the tip up mounting structure, and retains the carriage assemblies and attached moving chain.

Specifications/Characteristics

Table 6.1
Track Assembly Characteristics

SPECIFICATIONS / CHARACTERICS	DESCRIPTION
Track Assembly	
Straight Sections	
P/N 01-11-0110	
Outside Dimensions:	
Lengths	12 ft
Height	9 inches
Width	6 Inches
Weight	5 pounds per linear foot
Curve Sections (inside radius)	
P/N 01-11-0120	
Outside Dimensions:	
Height	9 inches
Width	6 inches
Weight	5 pounds per linear foot
Arc	22.5 degrees
Radius	10 ft measured to CL of carriage travel
Curve Sections (outside radius)	
P/N 01-11-0130	
Outside Dimensions:	
Height	9 inches
Width	6 inches
Weight	5 pounds per linear foot
Arc	22.5 degrees
Radius	10 ft measured to CL of carriage travel
Access Door Sections	
2 standard configurations	
P/N 01-11-0140	4ft Door (Set in 6 ft track length)
P/N 01-11-0141	6ft Door (Set in 8 ft track length)
Outside Dimensions:	
Height	9 inches
Width	6 inches
Weight	6 pounds per linear foot

Expansion Joint **P/N 01-11-5491** Height Width Weight	 4 Feet Long 9 inches 6 inches 6 pounds per linear ft

Figure 6.1
Standard Track Section

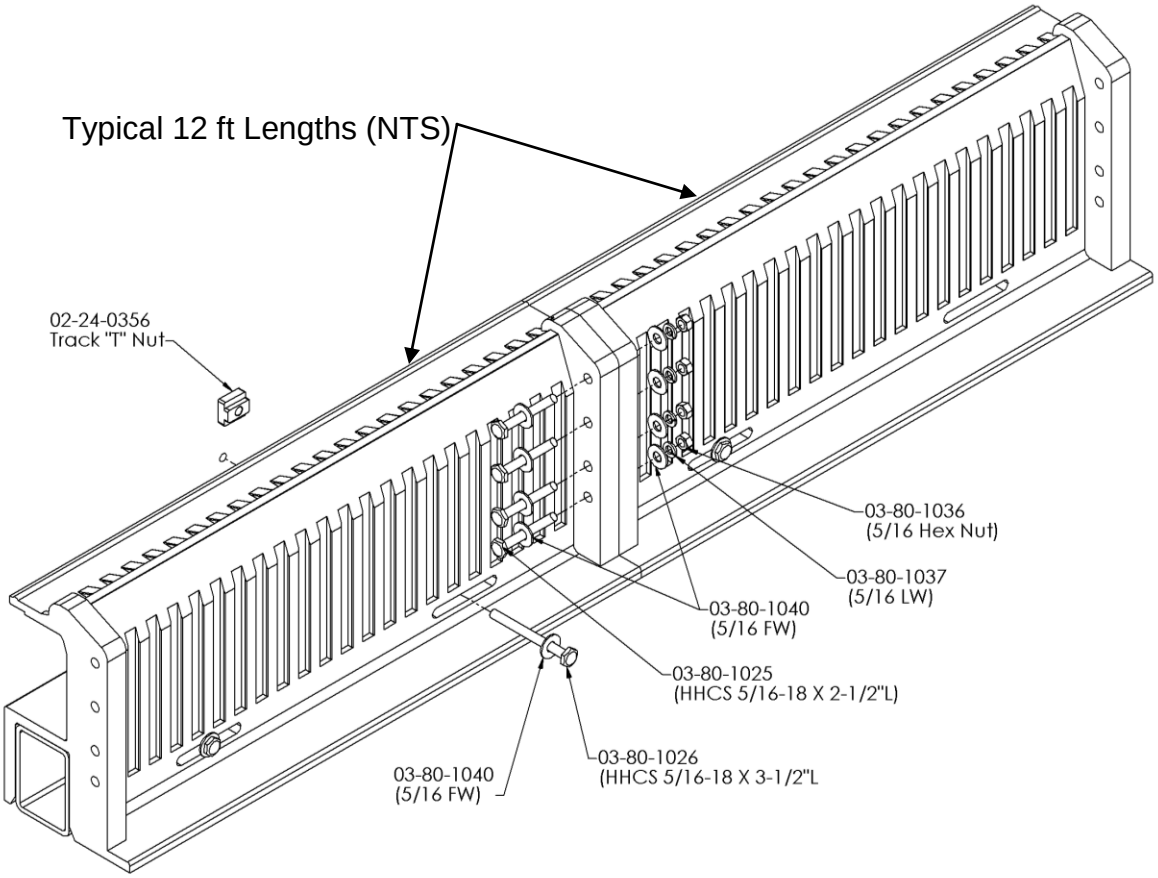

Figure 6.2
Standard Curved Track Section

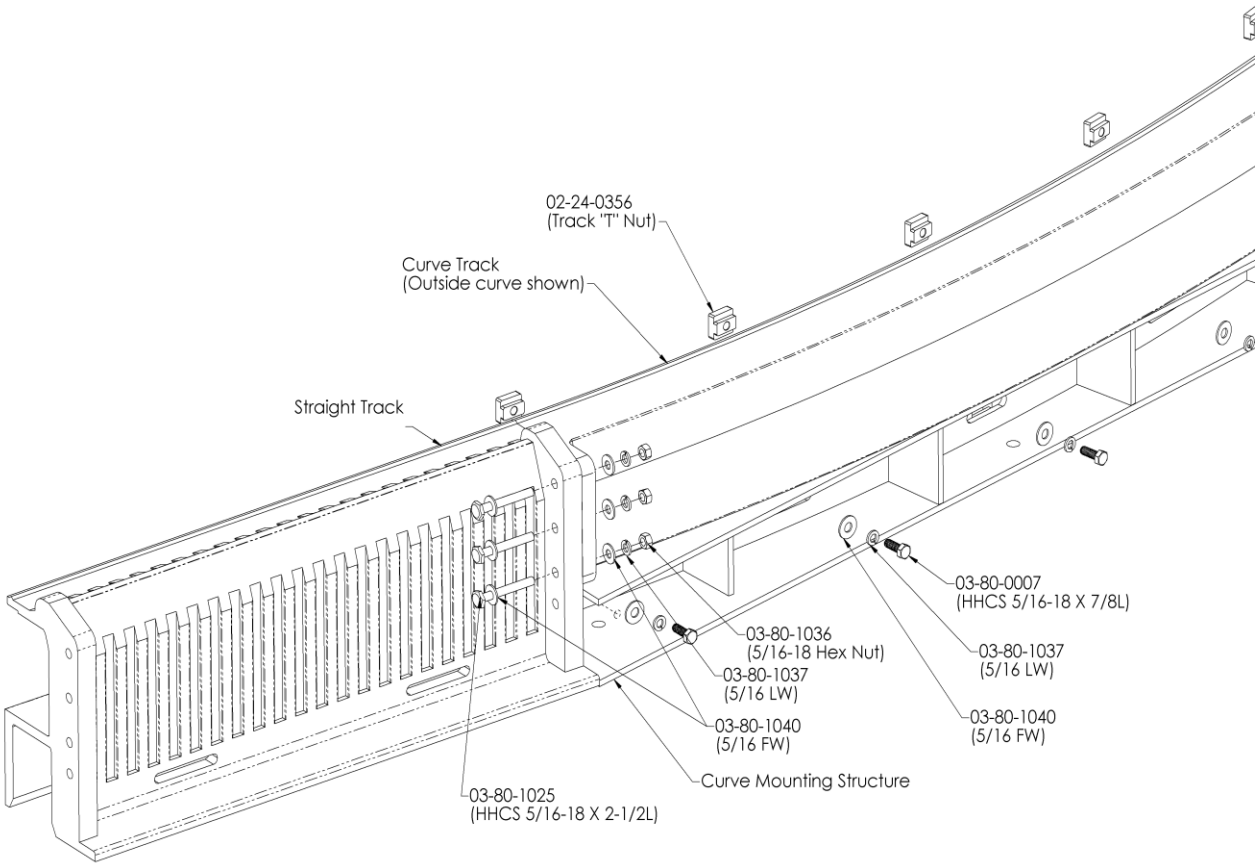

Figure 6.3
Access Panel Track Section

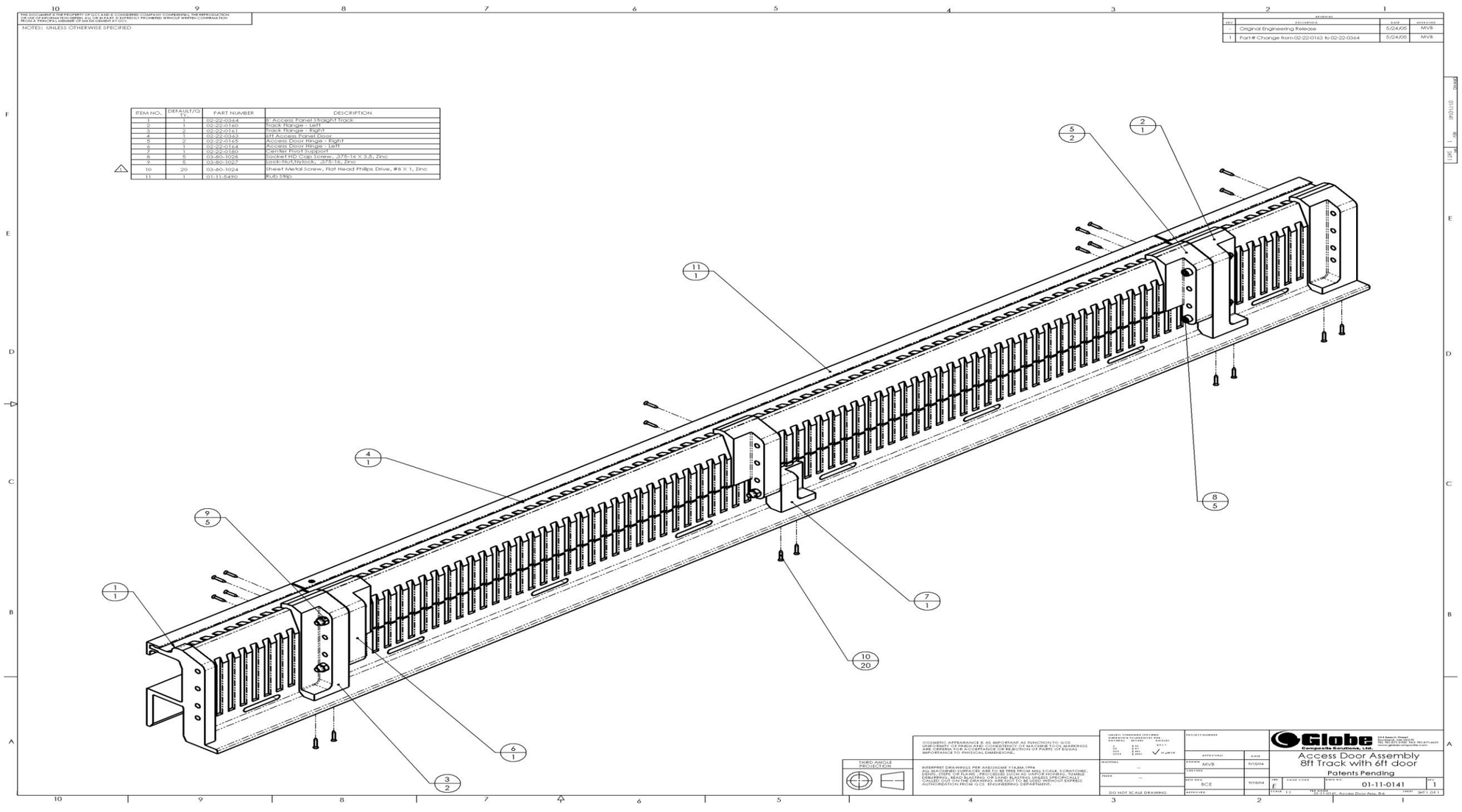

Figure 6.4
Expansion Joint Track Section

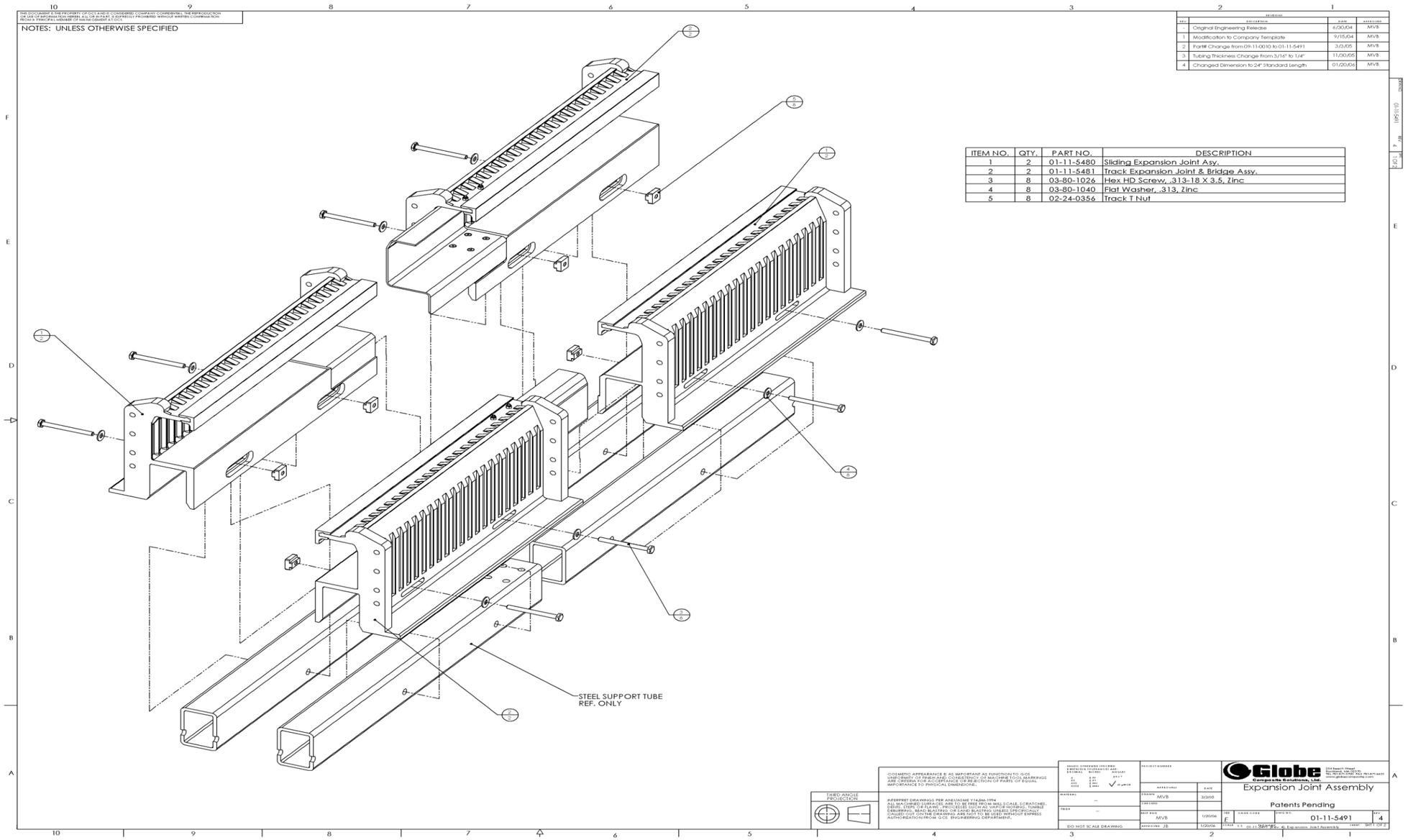

7. Static Dissipation – Grounding (Fig 7.1)

Description

Static charges can accumulate on any system components where there is relative motion between parts. To dissipate this static it is necessary to ground the accumulated charge in the components as the system runs. Static dissipation on the composite system can be accomplished by using a low impedance braided ground strap to “scrub” the carriages and the chain at several locations (about every 100 ft) along the system length.

See figure 7.1 for complete static grounding instructions.

Figure 7.1
Static Dissipation – Grounding

SHT 1 OF 1 | REV 2 | DRW NO 01-11-0118

REVISIONS			
REV	DESCRIPTION	DATE	APPROVED
-	Original Engineering Release	11/30/05	MVB
1	Added 17 Ga. Music Wire to Dissp. Kit	4/26/06	MVB
2	Remvd. Carriage Dissp./ Redesign of Lwr.	5/13/06	MVB

FIGURE 1

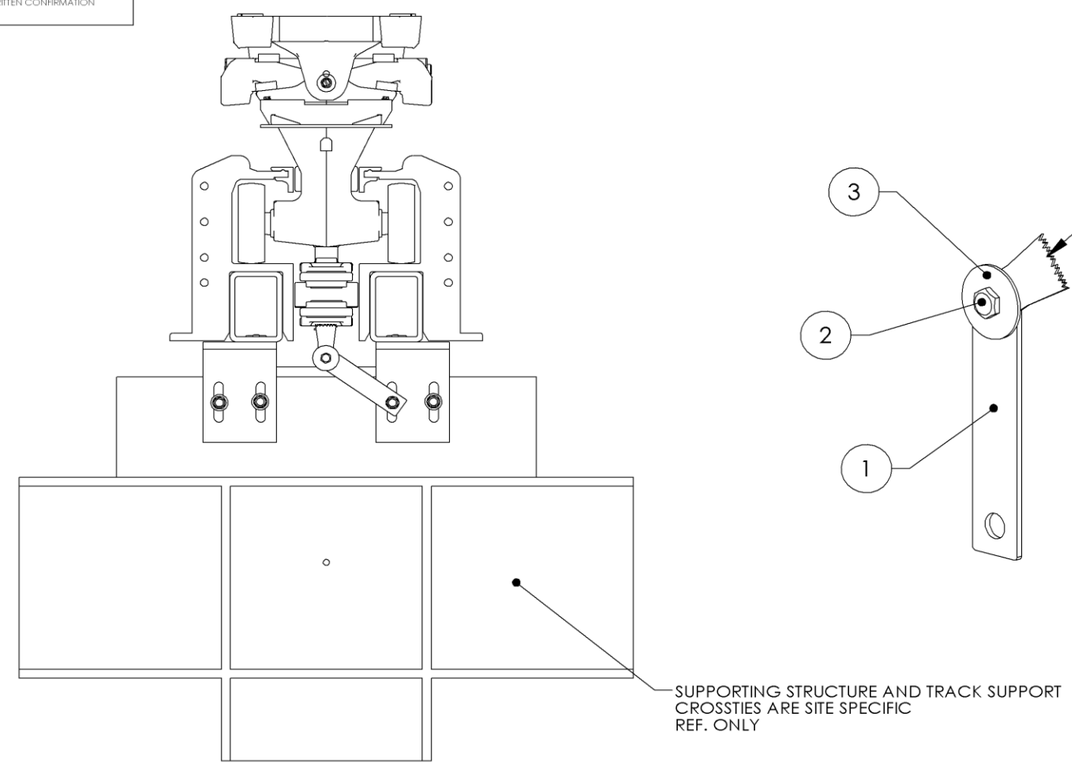

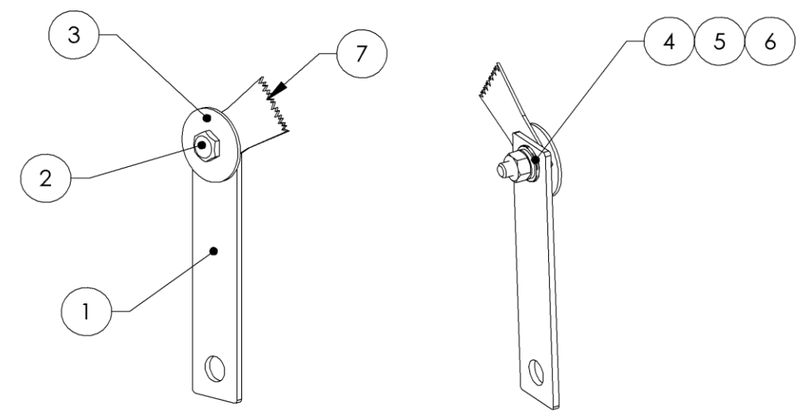

FIGURE 2

STATIC DISSIPATER INSTALLATION NOTES:

1. CUT AND ATTACH A 2" LENGTH OF BRAIDED GROUND STRAP (P/N: 03-85-9007) TO THE SOLID STEEL STATIC GROUNDING BAR (P/N: 02-30-0113). USING THE 1/4" HARDWARE NOTED ABOVE, TRAP THE BRAIDED GROUND STRAP BETWEEN THE SOLID STEEL GROUND STRAP AND THE FENDER WASHER. (SEE FIGURE 2)
2. FLARE THE END OF THE BRAIDED GROUND STRAP THAT WILL BE IN CONTACT WITH THE CHAIN TO INCREASE SURFACE AREA CONTACT.
3. ATTACH THE STATIC DISSIPATION ASSEMBLY TO THE CROSSTIE AS ILLUSTRATED ABOVE USING THE CROSSTIE CLIP HARDWARE.
4. ORIENTATE THE STATIC DISSIPATION ASSEMBLY TO ENSURE THE BRAIDED GROUND STRAP TOUCHES THE LOWER SIDE OF THE CHAIN. (SEE FIGURE 1)

   NOTE: ENSURE THAT THE SOLID STEEL GROUNDING STRAP WILL NOT COME IN CONTACT WITH THE CHAIN.

4. STATIC DISSIPATION ASSEMBLIES WILL BE FASTENED EVERY 100FT.

ITEM NO.	QTY.	PART NO.	DESCRIPTION
1	1	02-30-0113	Static Grounding Bar
2	1	03-80-1320	Hex Head Cap Screw, 1/4-20 X .75, GR 5, Steel, Zinc Plate
3	1	03-80-1321	Flat Washer, 1/4" Fender, Steel, Zinc Plated
4	1	03-80-1042	Flat Washer, 1/4", Steel, Zinc Plated, USS
5	1	03-80-1178	Hex Nut, 1/4-20, GR5, Steel, Zinc Plated
6	1	03-80-1322	Lock Washer, 1/4", Steel, Zinc Plated
7	1	03-85-9007	Braided Ground Strap

THIRD ANGLE PROJECTION

COSMETIC APPEARANCE IS AS IMPORTANT AS FUNCTION TO GCS UNIFORMITY OF FINISH AND CONSISTENCY OF MACHINE TOOL MARKINGS ARE CRITERIA FOR ACCEPTANCE OR REJECTION OF PARTS OF EQUAL IMPORTANCE TO PHYSICAL DIMENSIONS.

INTERPRET DRAWING PER ANSI/ASME Y14.5M-1994
ALL MACHINED SURFACES ARE TO BE FREE FROM MILL SCALE, SCRATCHES, DENTS, STEPS, OR FLAWS. PROCESSES SUCH AS VAPOR HONING, TUMBLE DEBURRING, BEAD BLASTING, OR SAND BLASTING UNLESS SPECIFICALLY CALLED OUT ON THE DRAWING ARE NOT TO BE USED WITHOUT EXPRESS AUTHORIZATION FROM GCS ENGINEERING DEPT.

UNLESS OTHERWISE SPECIFIED DIMENSION TOLERANCES ARE:

DECIMAL	INCHES	ANGLES
X	± .02	± 0.5°
XX	± .01	
XXX	± .005	
XXXX	± .0005	√ 63 µINCH

MATERIAL 1
FINISH 2
DO NOT SCALE DRAWING

PROJECT NUMBER

APPROVALS		DATE
DRAWN	MVB	5/14/06
CHECKED		
RESP ENG	MVB	5/14/06
APPROVED	JB	

Globe Composite Solutions, Ltd.
254 Beech Street
Rockland, MA 02370
TEL 781-871-3700 FAX 781-871-6631
www.globecomposite.com

Static Dissipation Grounding Kit
USPS

SIZE B | CAGE CODE | DWG NO. 01-11-0118 | REV 2
SCALE 1:1 | FILE NAME 01-11-0118, Static Dissipation Grounding Kit_USPS | SHT 1 OF 1

8. Preventative Maintenance

GENERAL

Composite preventive maintenance procedures tend to be more inspection/remedy driven in contrast to the traditional continuous servicing activities required of metallic components. Many of the composite components are self-lubricating and resistant to wear and will provide years of trouble free operation requiring only minor maintenance activity. However, with any complex machine containing thousands of moving parts and especially with composite components, preventative maintenance is the component toward assuring continued operational status.

It is vitally important that maintenance personnel conduct frequent inspections for debris, damage, wear, deformity, and structural integrity.

CLEANING AND INSPECTION

It is anticipated that each USPS installation supporting composite equipped carousel sorters will detail their own inspection schedule based on their installation's work cycles and mail volume. However, it is recommended that, until the composite component sorters have been in service for an extended length of time, that inspection frequencies remain high until otherwise operationally warranted.

The following sections **recommend minimum inspection intervals.**

Debris

Debris within the track structure, lodged between the carriages assemblies, or within the bull gear environment is detrimental to sorter operation and may damage sorter components. It is recommended that debris inspections be conducted and the debris removed each working day.

Damage

Any damage, no matter how seemingly insignificant, to any composite component indicates a symptom of a greater problem within the sorter, which should be investigated and remedied immediately. It is recommended that general visual inspections be an integral part of the daily debris inspection.

Wear

Visible wear, scratches, or discoloration of any kind on a composite component also indicates a systemic problem requiring immediate investigation and remedy. Irregular wheel wear (carriage and tip up assemblies or chain rollers), scratches or wear marks on carriage assemblies or track sections all indicate unanticipated wear. It is recommended that comprehensive wear inspections be conducted weekly immediately after composite installation and monthly as warranted thereafter.

Deformity
Deformity is defined as any distortion of the composite component or its alignment. Maintenance personnel should incorporate a general deformity check in their daily debris/damage inspection.

The major source of deformity is the composite chain, which should be inspected at the bull gear exit during startup for “chain whip” which, if present, would indicate that the chain has stretched (deformed) and compensation is required. The chain should be inspected daily, especially within the first sixty (60) days following composite component installation.

Structural Integrity
Maintenance personnel should always be watchful of loose or vibrating composite track sections. Of special concern are the curved sections and those sections forming the inlet, radius, and outlet of the bull gear. Maintenance personnel should also inspect the security of the tip up mounts, tip ups, and track access panels. General structural integrity concerns should be an integral component to the daily debris/damage inspections.

The composite chain is made of a light colored material so as to aid the inspector to more readily see potential cracks or flaws as the inevitable environmental dirt fills these potential cracks and shows up as a dark line. It is recommended that these chain inspections be conducted weekly until warranted otherwise.

LUBRICATION AND CLEANING SCHEDULES

The various components of the composite sorting system do not require periodic lubrication. GCS has designed the components and selected materials that are self-lubricating without the need for any external lubricants such as oils, grease, etc. Any component lubrication that may be needed for assembly of carriages, etc. is done by GCS prior to shipment.

9. TROUBLE SHOOTING GUIDE

Trouble shooting is always a function of problem recognition, determination of cause, and then taking appropriate remedial action. Composite equipped carousel sorters should efficiently operate at optimal speed with minimal noise and without erratic movements such as vibration or snap movements. Any deviation from these operational norms indicates a problem within the sorter composite mechanisms and should be investigated immediately.

TROUBLESHOOTING PROCEDURES

Carriage Troubleshooting Procedures

TABLE 9-1
Carriage Assembly Troubleshooting Guide

TROUBLE	PROBABLE CAUSE	CORRECTION
Carriage Assemblies are moving erratically exiting the bull gear.	Loose chain Debris lodged in track Track damage	Inspect for chain whip by viewing moving chain from under the chain channel exiting the bull gear. If chain links are buckling exiting the bull gear then tighten chain slack. Inspect bull gear exit track section and remove debris. Inspect track for damage or misalignment. Repair or replace as appropriate.
Carriage Assemblies are moving erratically entering the bull gear.	Poor bull gear teeth and chain alignment	Check for excessive bull gear tooth wear. Check for proper chain bull gear tooth alignment.

Carriage Assembly is not tipping.	Misalignment or damage of entrance track. Carriage Assembly is damaged. Tip up assembly is damaged. Tip up assembly is not correctly activating. Tip up assembly is out of proper alignment.	Check track condition and alignment. Readjust, repair or replace as appropriate. Check for index lever and tray assembly freedom of movement. Check for damaged Carriage Assembly index lever(s) Check for missing index lever spring. Check for damaged tip up assembly. Repair or replace as required. Check for damaged or clogged airlines. Check for proper tip up control inputs. Check for proper alignment and readjust as required.
Carriage Assembly index lever and carrier tray do not exhibit freedom of movement.	Index lever pivot pin is not rotating. Carrier tray pivot pins are not rotating.	Check pivot pin for damage, dirt, or distortion. Clean or replace as required. Check carrier tray pivot pins for damage, dirt, or distortion. Clean or replace as required.
Carriage Assembly is not resetting after index pin release.	Index pin is not resetting in index plate seat.	Check for damaged or missing index pin. If index pin is present and undamaged, and the index plate seat is undamaged grease

Carriage Assembly is not resetting after index pin release.	Index pin is missing. Damaged index lever pin seat. Tray re-establishers are out of alignment, damaged or missing.	index pin and return to service. Replace index pin. Inspect index lever plate seat for damage and replace index lever if damaged. Repair and/or realign tray re-establishers.
Carriage Assembly is not aligned with the track.	Broken carriage assembly attachment pin. Damage carriage assembly centering wheel. Carriage assembly installed incorrectly. Track obstruction.	Inspect for broken or missing alignment pin(s) and replace as required. Inspect carriage wheel centering wheel for damage and replace as required. Realign carriage assembly. Inspect track and remove obstruction.
Carriage Assembly shows scarring.	Track obstruction. Track damage.	Inspect track for debris or obstructions. Inspect track for visible damage and replace as necessary.
Carriage Assembly rocks back and forth while transversing the sorter.	Worn or damaged carriage assembly wheels.	Inspect carriage assembly wheels and replace as required.
Carriage Assembly vibrates while transversing the sorter.	Track debris. Damaged carriage assembly wheels.	Inspect track and remove debris. Inspect carriage assembly wheels and replace as necessary.

Tip up Troubleshooting Procedures

TABLE 9-2
Tip up Assembly Troubleshooting Guide

TROUBLE	PROBABLE CAUSE	CORRECTION
Tip up Assembly is not operating.	No power.	Check for loose or disconnect power connections and repair as required.
	Tip up assembly not receiving activation signal.	Check I/O signal. If I/O signal is operating normally, check for available cylinder air pressure.
	No air supply.	Check for air pressure at Tip-Up connection. If air pressure is present replace air cylinder. If air pressure is not present, check compressed air source for proper operation. If compressed source is operating normally, check for loose or obstructed air lines.
Tip up Assembly is not tripping the Carriage Assembly.	Tip up Assembly is striking the index lever too late to initiate index lever movement.	Check and reset I/O signal as necessary.
	Tip up Assembly is out of alignment.	Check for proper alignment and adjust as necessary.
	Tip-Up Assembly is inoperable.	See Tip-Up Assembly in op procedures above.

	Tip-Up Assembly is not fully deploying.	Check for obstruction in path of Tip-Up Assembly deployment path. Check for specified air pressure available at cylinder actuator.
Tip up Assembly roller is damaged.	Carriage assembly index lever(s) are inappropriate striking the tip up roller.	Check Tip-Up Assembly for proper alignment and replace roller as required. Inspect remaining Tip-Up Assemblies for similar damage. If similar damage exists, inspect carriage assembly index levers for damage and replace as required.
Tip up Assembly housing is fractured.	Carriage assembly(s) or mail debris impacted tip up.	Replace Tip-Up Assembly. Inspect remaining Tip-Up Assemblies for similar damage. If similar damage exists, attempt to locate cause of damage and repair/replace as necessary.

Track Trouble Shooting Procedures

TABLE 9-3
Track Assembly Troubleshooting Guide

TROUBLE	PROBABLE CAUSE	CORRECTION
Accumulation of green dust or shavings.	Chain, carriage assemblies or a foreign object is rubbing or scrapping the track.	Attempt to locate source of green dust by location (inspect track system for beginning and ending traces of green dust. If wear source can be located, repair, remove and replace wear source as required. Check for foreign objects lodged within track, chain, or carriage assemblies and remove same.
Track is scarred or worn.	Chain, carriage assembly or foreign object is rubbing or scrapping the track. Track is loose or has become misaligned.	If scarring is within the chain channel, check for damaged chain or an obstruction or foreign object lodged in chain links. Also inspect carriage assemblies for foreign objects lodged either on the carriage assembly mounting assembly or lodged within the carriage assembly chassis. Check for proper alignment and re-secure track components to mounting box beam.
Track is loose.	Track attachments bolts have loosened.	Inspect and tighten all loose attachment bolts.

		Be sure to also inspect the track flange attachment bolts for security.

Chain Trouble Shooting Procedures

TABLE 9-4
Chain Assembly Troubleshooting Guide

TROUBLE	PROBABLE CAUSE	CORRECTION
Dark line on chain link.	Indicates chain link crack.	Replace chain link. Inspect remaining chain links for cracking.
White dust or shavings found at bull gear entrance and/or exit.	Deterioration of bull gear teeth or chain links.	Inspect bull gear teeth for wear and replace as required. Inspect chain links for wear and replace as required.
Chain has fractured.	Track obstruction. Excessive wear.	Inspect entire track system and remove any obstructions. Inspect and remove any chain link exhibiting excessive wear to the point of potentially fracturing. Inspect track system to find potential sources of chain wear. Repair, replace, or remove any items or components suspected of contributing to chain wear or damage. If excessive wear is prevalent, replace entire chain.

10. SAFETY PRECAUTIONS

INTRODUCTION

Safety is everyone's responsibility. There is no excuse for compromising safety and risking personal injury. This handbook contains a listing of general safety precautions as well as equipment-specific safety warnings, cautions, and notes. All of these safety precautions are provided not only to protect operating and maintenance personnel but also to provide safe and efficient equipment operation.

IDENTIFICATION OF SAFETY STATEMENTS

WARNING

Identifies a hazard or procedure that could cause bodily injury or loss of life.

CAUTION

Identifies a hazard or procedure that could result in equipment damage or destruction.

NOTE

Identifies a condition or task that requires special attention.

SAFETY PRECAUTIONS

Do not wear loose fitting clothing, jewelry, ties, etc.
Always sound warning horn before starting sorter.
Do not work on equipment that is still in motion.
Always stop sorter before attempting to remove debris.
Follow all safety precautions.
Use all appropriate safety devises/procedures (see 5.3 and 5.4).
Do not negate LOCKOUT and/or TAGOUT devices and procedures.
Wear appropriate protective equipment at all times.
Keep your work area free of debris.
Keep mentally and physically alert.
Always use the correct tools for the job.
Common sense is your best defense against injury.
Avoid all hazardous conditions and report them to your immediate supervisor.
If you don't know or are unsure, ask your supervisor.
Don't take chances you may lose.

UNDER NO CIRCUMSTANCES SHALL ANY PERSON STEP ON, WALK ON, STAND ON OR CROSS OVER ANY PORTION OF THE MECHANIZATION UNLESS POWER TO THE EQUIPMENT IS LOCKED OUT.

UNDER NO CIRCUMSTANCES SHALL ANY PERSON LEAN ON, SIT ON, KNEEL ON LAY ON, CLIMB ON, STEP ON, WALK ON, OR STAND ON A PARCEL TRAY MODULE. BI-DIRECTIONAL TIP COMPOSITE CARRIAGE MODULES ARE DESIGNED ONLY TO SUPPORT THE WEIGHT OF THE PARCEL TRAY MODULE AND THE PARCEL BEING TRANSPORTED. PARCEL TRAY MODULES MAY TIP WHEN FORCE IS APPLIED.

MAINTENANCE PERSONNEL MUST BE THOROUGHLY FAMILIAR WITH USPS HANDBOOK EL-803; MAINTENANCE EMPLOYEES GUIDE TO SAFETY. ALL EMPLOYEES MUST USE USPS LOCKOUT PROCEDURES.

SAFETY DEVICE DEFINITION
Working on or near exposed electrical equipment can be a hazard. Effective hazardous energy control procedures protect employees during machine and equipment servicing and maintenance in any situation where the unexpected energizing, startup, or release of stored energy could occur and cause injury to employees. While an employee is exposed or potentially come in contact with exposed electrical components or circuits; such equipment must be secured in accordance with the requirement of 29 CFR 1910 233(b)(2).

Lockouts
Most electrical equipment utilized by the USPS, have embedded circuitry, isolating switches called "LOCKOUTS." Such locking out mechanisms must be activated before the start of servicing or maintenance on such equipment.

Tagouts
Where an embedded lockout switch, or other energy isolating device is incapable of being locked out as described above, a TAGOUT system must be utilized. Tagout procedures require that a safety alert tag be padlocked to the energizing element of any machine or piece of equipment undergoing servicing or maintenance. One padlock from each person working on the machine MUST be placed on the energy isolating element of the machine or piece of equipment. A tag without a lock, can be employed if supplemented by at least one additional safety measure that provides a level of safety equivalent to that obtained by the use of a lock such as opening an additional disconnecting device, removal or isolating the circuit energizing element, blocking the controlling switch or the removal of a valve handle to reduce the likelihood of inadvertent energization.

11. Sorter Start-up

During the de-bug, 8 hour test, and initial run-un it is not uncommon for a small percentage of the composite components to fail. This fall-out is not unusual and experience has shown that this is usually the result of components being mis-handled during shipping or the installation process as well as the normal infant mortality with the composite components. Tip-up failure is generally due to damage sustained to mis-aligned tip-ups during the de-bug phase. The common parts are:

Carriage Front Pivot Pin
Carriage Rear Pivot Pin
Carriage Index Lever Lock Pin

In anticipation of failed parts, GCS supplies these as a safety stock.

It normal to see black dust accumulating on the track during start-up. This is normal run-in of the centering wheel and rub/wear strip.

12. Spare Parts

GCS supplies a compliment of recommended spare parts which are listed in the Maintenance Manuals.

13. Warranty and Guarantee Provisions

Globe Composite Solutions, Ltd.(GCS) agrees that all products and/or equipment delivered under this purchase order shall be fully warranted and such warranty shall include the following minimum requirements:

- GCS warrants that all products delivered hereunder shall be free from defects or failures in design, material, and workmanship.
- The warranties provided hereunder shall be applicable to those defects or failures becoming apparent to the Owner within the first twelve (12) months of the completion of the 45 day test or Final Acceptance, whichever occurs first.
- GCS will provide all labor and materials necessary to correct or replace defective or non-conforming articles or parts thereof; to satisfactorily correct all damage to the subject equipment, the site, the building, or its contents that is a direct result of such unsatisfactory work; and to satisfactorily correct any work, materials, or equipment disturbed in fulfilling the warranty.
- Should GCS fail to proceed promptly within 3 days to address warranted items, the US Postal Service may have the work performed at GCS's expense.

Warranty and Guarantee Exclusions

GCS shall not warrant any products and/or equipment that are defective as a result of:

- The owners failure to maintain and/or operate the equipment as specified in the maintenance manuals.
- Damage due to neglect, jams, impacts, crashes, or any other such incident that is caused by mail, parcels, debris, or any other type of foreign object becoming lodged in the system.

Minor blemishes such as, but not limited to, bubbles, voids, and surface imperfections are not considered defects or failures unless they impede the performance of the products.

GCS does not warrant overall system through-put and efficiency specifications or requirements.

GCS acknowledges that the sorter speed can be increased to 360 feet per minute without any adverse affect to its system components. GCS does not warrant any damage as a result of re-configuring, re-adjusting, and/or re-setting the tip-up modules to match increased speed.

Handling of Defective Parts

If during the warranty period it is necessary to replace defective parts, the owner will ship the defective parts to GCS who in turn will repair and/or replace the defective parts and ship them back to the owner.